anSal REFRIGERACION S.A.
Otamendi 530 (C1405BRH) Buenos Aires - Argentina
Te: (5411) 4958 2884 ansal@ansal.com.ar
Fax: (5411) 4958 2886 http://www.ansal.com.ar

Jefferson

**Serie 1343F**

**Serie 1343**

## Características principales

- Cuerpo de fundición.
- Bridas para soldar forjadas en acero.
- Diafragmas y asientos de teflón.
- Bobinas capsuladas con conexiones DIN 43650. IP65.
- Mínima presión de trabajo: 0,07 BAR (1 PSI) excepto: 1343 AT1: 0 BAR.
- Máxima presión diferencial: 21 BAR (300 PSI).
- Rango de temperatura: -40ºC a 110ºC (-40F a 230F).
- Operador manual excepto en 1343 AT1 opcional en 1343 AT3.
- Opcional filtro 1347 incorporado.

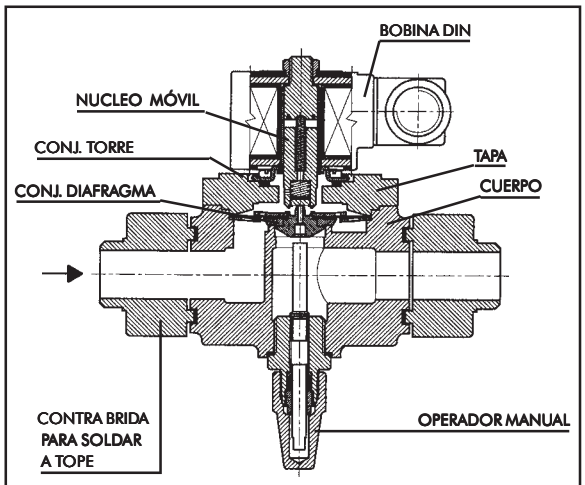


**1343**

## Especificaciones técnicas

| Tamaño | Conexión | Nº Catalogo | | Coef. Kv. | Peso | | Kit de Reparación | |
|---|---|---|---|---|---|---|---|---|
| | | sin filtro | con filtro | | s/filtro | c/filtro | sin filtro | con filtro |
| 1/2" | Bridas p/soldar | **1343 AT1** | **1343 AT1F** | 0,16 | 1.58 | 2.75 | K43HT1 | K43HT1F |
| | Bridas p/soldar | **1343 AT3** | **1343 AT3F** | 1,6 | 1.95 | 3 | K43FT1 | K43FT1F |
| 3/4" | Bridas p/soldar | **1343 AT34** | **1343 AT34F** | 2,1 | 2.15 | 4.34 | K43FT3 | K43FT3F |
| | Bridas p/soldar | **1343 AT4** | **1343 AT4F** | 4,5 | 3.554 | 5.74 | K43FT2 | K43FT2F |
| 1" | Bridas p/soldar | **1343 AT5** | **1343 AT5F** | 6 | 3.28 | 5.64 | | |
| | Bridas p/soldar | **1343 AT6** | **1343 AT6F** | 8 | 3.6 | 5.53 | K43FT5 | K43FT5F |
| 1,1/4" | Bridas p/soldar | **1343 AT7** | **1343 AT7F** | | 3.5 | 5.43 | | |

*Opcionales:*

- *El operador manual es de provisión estandard para los tamaños desde 3/4" a 1,1/4".*
  *Para los tamaños 3 agregar el sufijo **M** al número de catálogo*
  *Ejemplo: 1343 AT3-**M.***

## Dimensions

| w/o strainer | A | B | C | D | E | with strainer | G | ø H |
|---|---|---|---|---|---|---|---|---|
| 1343AT1 | 130 | 95 | 20 | ø14 | 80 | 1343AT1F | 186 | 96 |
| 1343AT3 | 132 | 99 | 71 | ø14 | 80 | 1343AT3F | 488 | |
| 1343AT34 | 132 | 99 | 71 | ø19.3 | 80 | 1343AT34F | 188 | |
| 1343AT4 | 159 | 109 | 80 | ø19.3 | 96 | 1343AT4F | 239 | 126 |
| 1343AT5 | 159 | 109 | 80 | ø26 | 96 | 1343AT5F | 239 | |
| 1343AT6 | 157 | 126 | 76 | ø26 | 96 | 1343AT6F | 239 | |
| 1343AT7 | 157 | 126 | 76 | ø32 | 96 | 1343AT7F | 241 | |

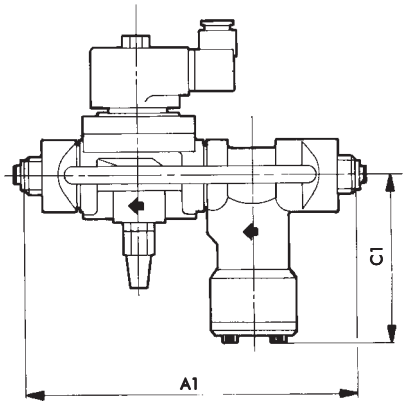


### 1343 AT1

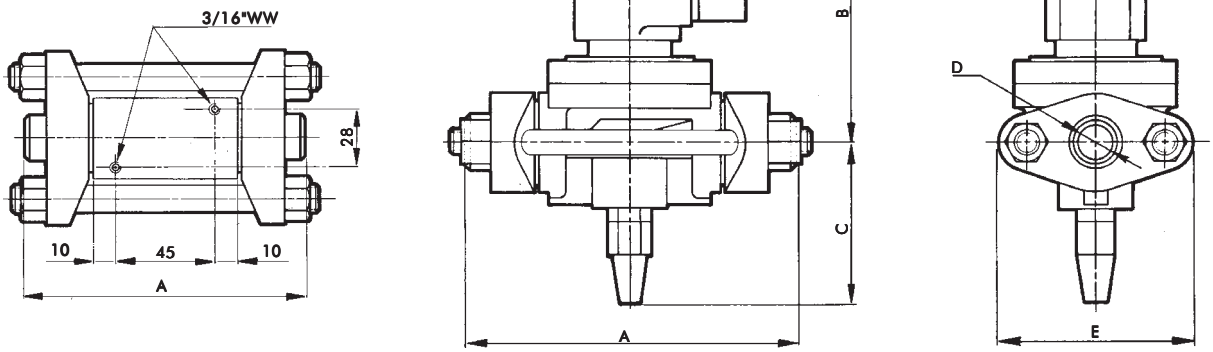


***NOTES:*** *(**) Upon request PG11 or 1/2" NPT conduit. Optional luminous indicator*

## Recommendations for the installation of solenoid valves

- Place a strainer immediately upstream of the valve of less than 100µ.
- Most favourable position: Upon a horizontal pipe line with the coil in the upright position

ISO 9001

Underwriters Laboratories Inc.®

FILE MH16855 Vol. 2 Secc.2

## Typical circuit of refrigeration for $NH_3$ evaporators at different temperatures

1. Compressor
2. Condenser
3. Receiver
4. Filter-dryer
5. Strainer
6. Solenoid valve
7. Magnetic level switch
8. Separator tank
9. Pumping Station
10. Throtling Valve
11. Evaporation Pressure Regulating Valve
12. Relief valve

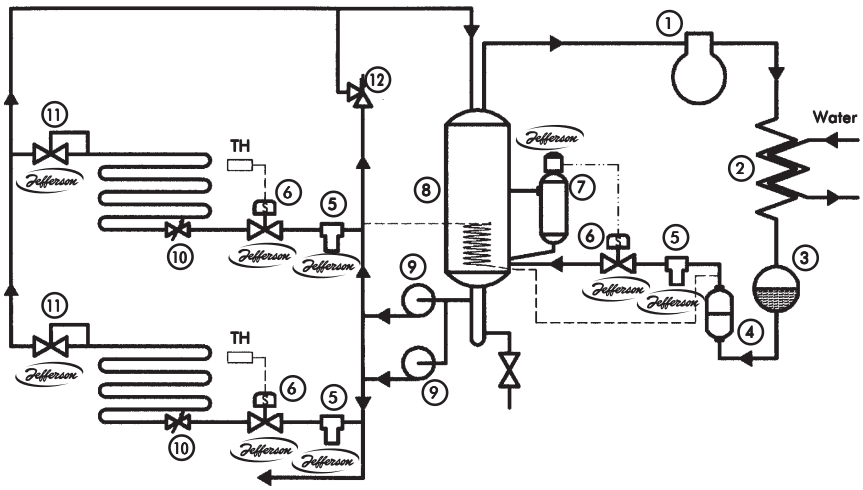


anSal REFRIGERACION S.A. Desde 1946